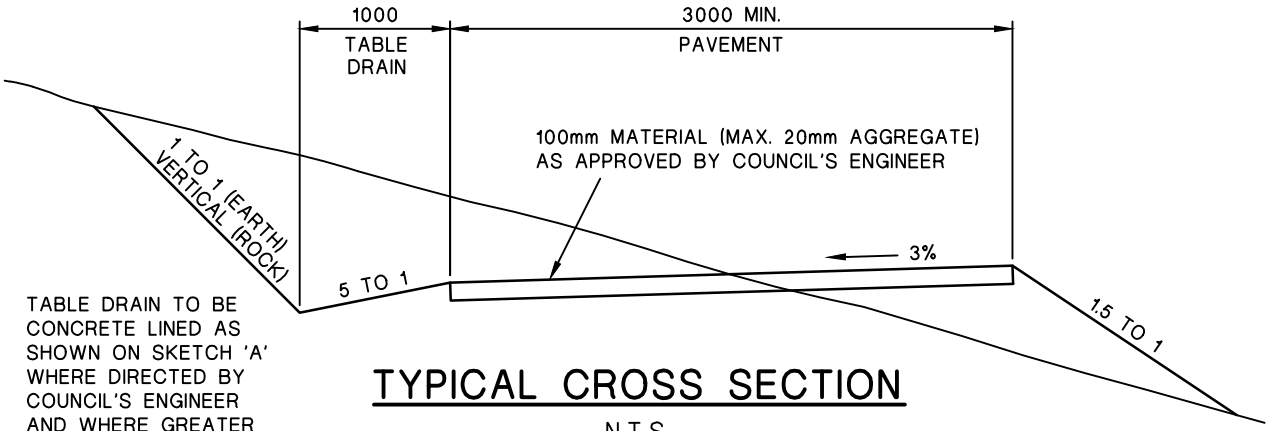

TABLE DRAIN TO BE CONCRETE LINED AS SHOWN ON SKETCH 'A' WHERE DIRECTED BY COUNCIL'S ENGINEER AND WHERE GREATER THAN 7%

TYPICAL CROSS SECTION

N.T.S.

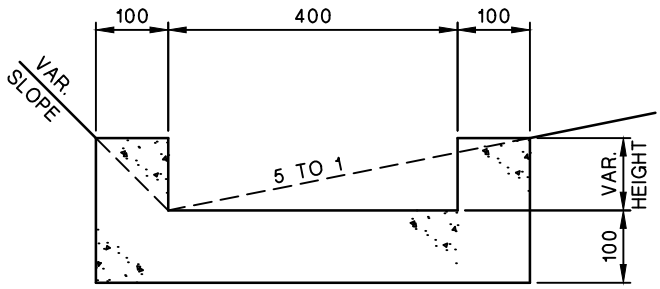

SKETCH 'A'

N.T.S.

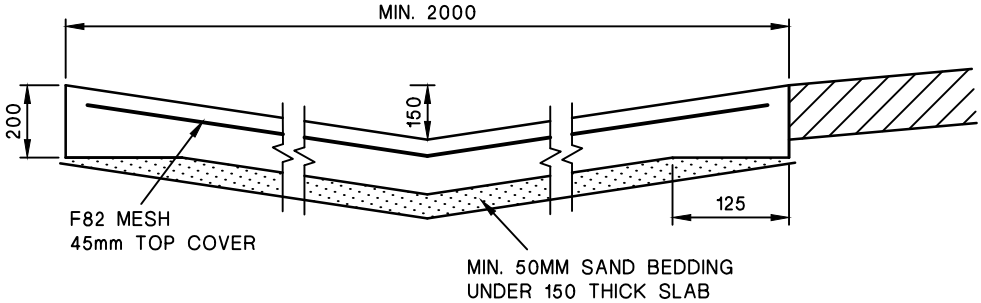

DETAIL OF CONCRETE CAUSEWAY

N.T.S.

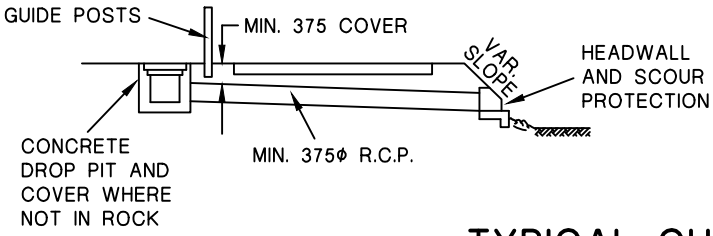

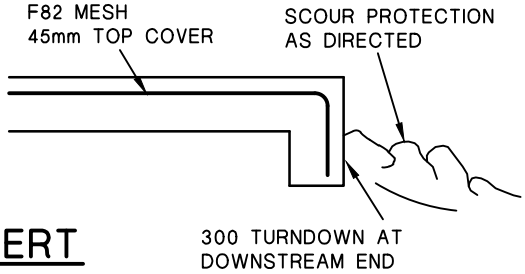

TYPICAL CULVERT

N.T.S.

NOTE: ALL DIMENSIONS ARE IN MILLIMETRES (UNO)

THE HILLS Sydney's Garden Shire	THE HILLS SHIRE COUNCIL	DATE: AUG. 2010
	FIRE TRAILS	DRAWING No.: SD.41